Bomba Horizontal Multicelular CHLF

Bomba multicelular horizontal em aço inoxidável AISI 304.

Ficha Técnica Completa com Dados Técnicos, Dimensões e Curva de Performance

TENSÃO **1~ 220-240V / 3~ 220-240V/380-415V**

Digitalize para ver detalhes do produto:

JOVAL - Marinho Oliveira S.A. | Zona Industrial do Socorro, Lote 10, Fafe

www.joval.pt

JOVAL - Marinho Oliveira S.A.
Zona Industrial do Socorro, Lote 10, 4820-011 Fafe
Tel: +351 253 490 740 | Email: joval@joval.pt | www.joval.pt

Bomba Horizontal Multicelular CHLF

Bomba multicelular horizontal em aço inoxidável AISI 304.

A série CHLF é uma bomba multicelular horizontal em aço inoxidável, compacta e silenciosa, ideal para pressurização doméstica, rega e aplicações industriais. Construída para durabilidade e eficiência energética, a sua estrutura em aço inoxidável AISI 304 garante resistência à corrosão e uma longa vida útil.

APLICAÇÕES

- Ar condicionado e arrefecimento
- Limpeza industrial
- Tratamento de água (purificação)
- Aquacultura
- Sistemas de fertilização
- Aplicações ambientais
- Sistemas de pressurização
- Rega e agricultura

DADOS TÉCNICOS

ESPECIFICAÇÕES TÉCNICAS

Tipo	Bomba centrífuga multicelular
Bomba multicelular horizontal, entrada axial e saída radial	Bomba multicelular horizontal, entrada axial e saída radial
Material	Aço Inoxidável AISI 304 (1.4301)
Vedação	Empanque mecânico SiC/Grafite
Proteção	IP 55
Isolamento	Classe F
Máximo 20 arranques por hora	Máximo 20 arranques por hora

CONDIÇÕES DE UTILIZAÇÃO

Temp. do líquido	-15°C a 70°C
70°C a 110°C	70°C a 110°C
Temp. Ambiente	Máx. 52°C
Pressão Máxima	10 bar
Tipo de líquido	Líquidos limpos, pouco espessos, não-inflamáveis, sem sólidos ou fibras

CARACTERÍSTICAS DO MOTOR

Velocidade Nominal	2900 rpm
Tensão	1~ 220-240V / 3~ 220-240V/380-415V
Eficiência	IE2 (1~) / IE3 (3~ >0.55kW)
Normas	ISO 9906, apêndice A

DIMENSÕES

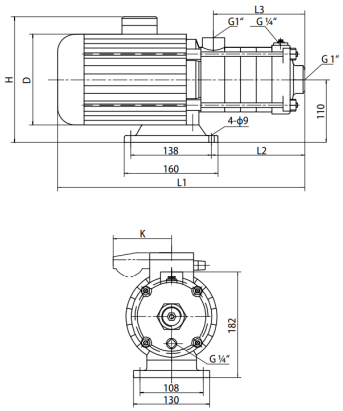

Modelo	L1	L2	L3	H (1Ø)	H (3Ø)	D	K (1Ø)	Peso
CHLF 2-20	305,0	87,0	84,0	230,0	215,0	145,0	96,0	15,0
CHLF 2-30	323,0	105,0	102,0	230,0	215,0	145,0	96,0	15,0
CHLF 2-40	341,0	123,0	120,0	230,0	215,0	145,0	96,0	15,0
CHLF 2-50	359,0	141,0	138,0	230,0	215,0	145,0	96,0	15,0
CHLF 2-60	422,0	159,0	156,0	245,0	225,0	170,0	100,0	17,0

DIMENSÕES

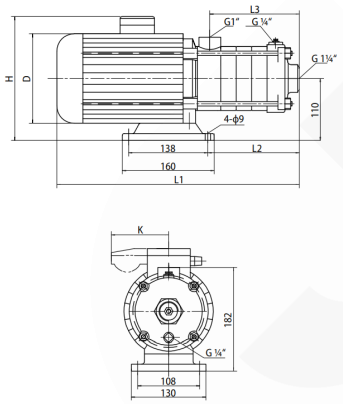

Modelo	L1	L2	L3	H (1Ø)	H (3Ø)	D	K (1Ø)	Peso
CHLF 4-20	329,0	105,0	102,0	230,0	215,0	145,0	96,0	15,0
CHLF 4-30	356,0	132,0	129,0	230,0	215,0	145,0	96,0	15,0
CHLF 4-40	416,0	162,0	156,0	245,0	225,0	170,0	100,0	17,0
CHLF 4-50	455,0	188,0	183,0	245,0	225,0	170,0	100,0	17,0
CHLF 4-60	482,0	213,0	213,0	245,0	225,0	170,0	100,0	17,0

DIMENSÕES

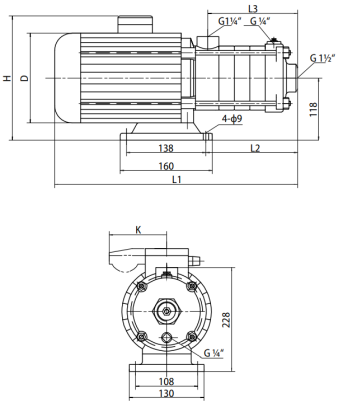

Modelo	L1	L2	L3	H (1Ø)	H (3Ø)	D	K (1Ø)	Peso
CHLF 8-10	395,0	126,0	108,0	265,0	230,0	170,0	100,0	20,0
CHLF 8-20	395,0	126,0	108,0	265,0	230,0	170,0	100,0	20,0
CHLF 8-30	425,0	156,0	138,0	265,0	230,0	170,0	100,0	25,0
CHLF 8-40	490,0	186,0	168,0	270,0	240,0	180,0	100,0	28,0
CHLF 8-50	520,0	216,0	198,0	270,0	240,0	180,0	100,0	30,0

DIMENSÕES

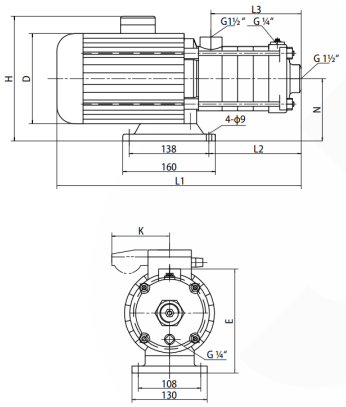

Modelo	L1	L2	L3	H (1Ø)	H (3Ø)	D	E	N	K (1Ø)	Peso
CHLF 12-10	395,0	126,0	108,0	265,0	230,0	170,0	228,0	118,0	100,0	20,0
CHLF 12-20	395,0	126,0	108,0	265,0	230,0	170,0	228,0	118,0	100,0	21,0
CHLF 12-30	460,0	156,0	138,0	270,0	240,0	180,0	228,0	118,0	100,0	25,0
CHLF 12-40	490,0	186,0	168,0	270,0	240,0	180,0	228,0	118,0	100,0	29,0
CHLF 12-50	555,0	216,0	198,0	270,0	195,0	240,0	126,0	126,0	126,0	34,0

CURVA DE PERFORMANCE (Q - HM)

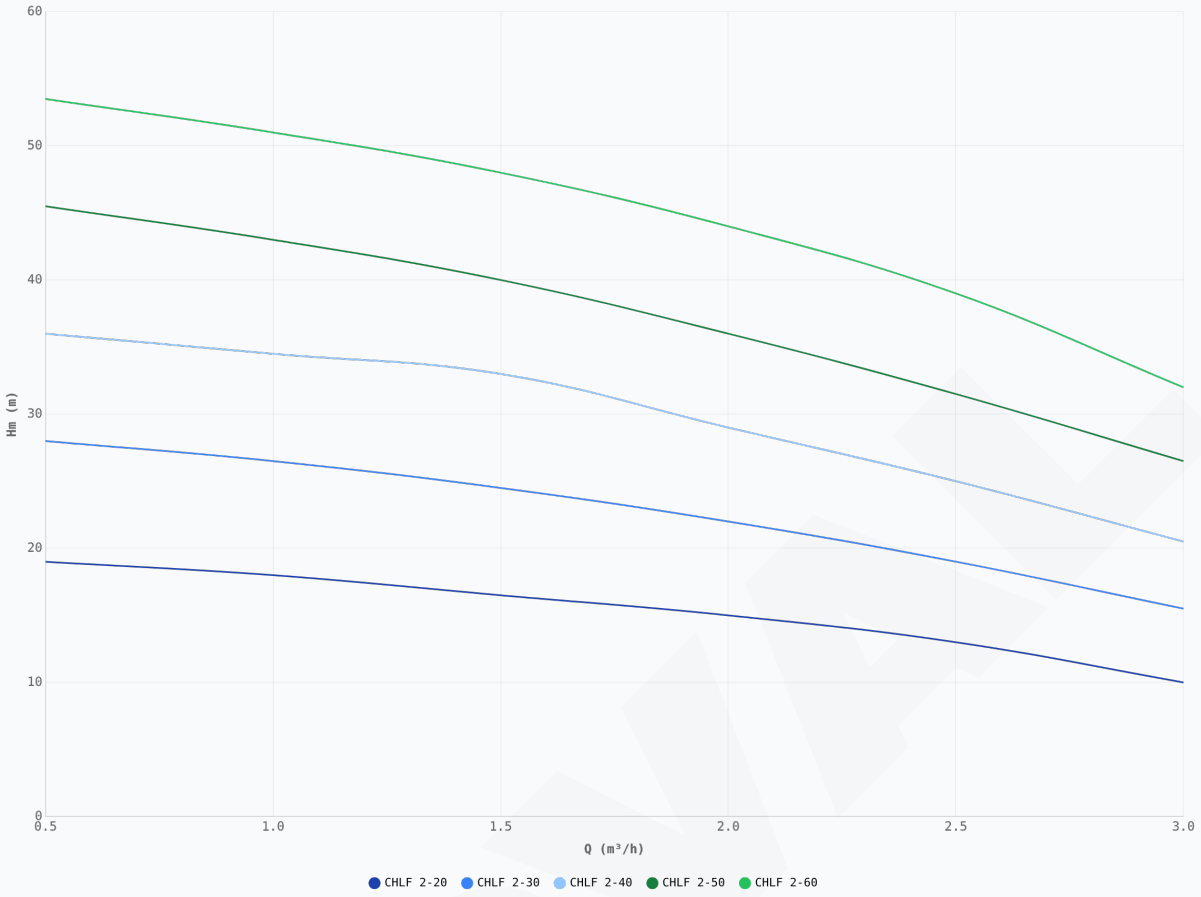

Curvas de caudal (Q) vs. altura manométrica (Hm)

Modelo	kW	HP	Amp (1~ / 3~)	m³/h	0.5	1	1.5	2	2.5	3
				Hm (m)						
CHLF 2-20	0,37	0,50	2.26 / 1.66-1.49		19,0	18,0	16,5	15,0	13,0	10,0
CHLF 2-30	0,37	0,50	3.65 / 2.20-2.11		28,0	26,5	24,5	22,0	19,0	15,5
CHLF 2-40	0,55	0,75	3.65 / 2.20-2.11		36,0	34,5	33,0	29,0	25,0	20,5
CHLF 2-50	0,55	0,75	3.65 / 2.20-2.11		45,5	43,0	40,0	36,0	31,5	26,5
CHLF 2-60	0,75	1,00	4.8 / 3.01-2.86		53,5	51,0	48,0	44,0	39,0	32,0

CURVA DE PERFORMANCE (Q - HM)

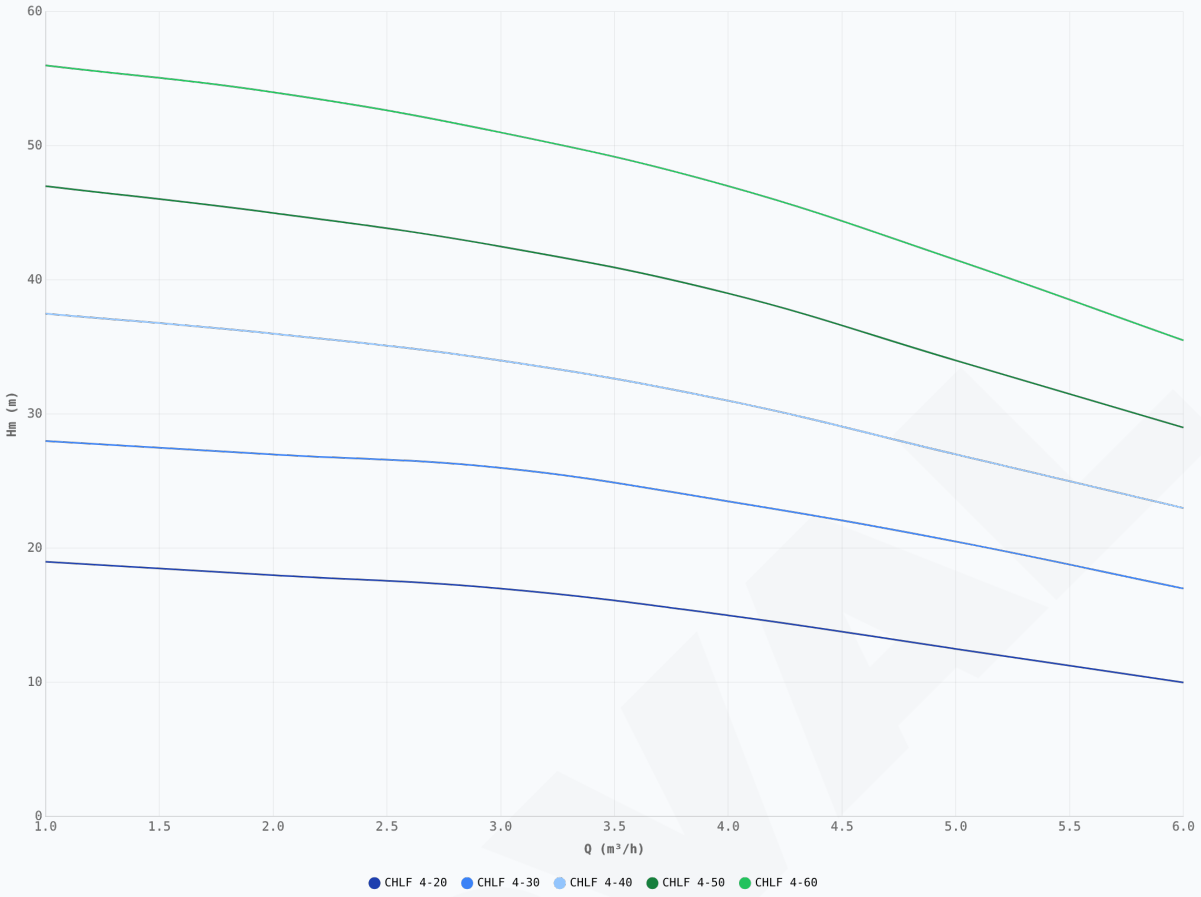

Curvas de caudal (Q) vs. altura manométrica (Hm)

Modelo	kW	HP	Amp (1~ / 3~)	m³/h	1	2	3	4	5	6
				Hm (m)						
CHLF 4-20	0,37	0,50	3.65 / 2.2-2.11		19,0	18,0	17,0	15,0	12,5	10,0
CHLF 4-30	0,55	0,75	3.9 / 2.3-2.2		28,0	27,0	26,0	23,5	20,5	17,0
CHLF 4-40	0,75	1,00	4.8 / 3.01-2.86		37,5	36,0	34,0	31,0	27,0	23,0
CHLF 4-50	1,10	1,50	7.0 / 4.16-3.98		47,0	45,0	42,5	39,0	34,0	29,0
CHLF 4-60	1,10	1,50	7.0 / 4.16-3.98		56,0	54,0	51,0	47,0	41,5	35,5

CURVA DE PERFORMANCE (Q - HM)

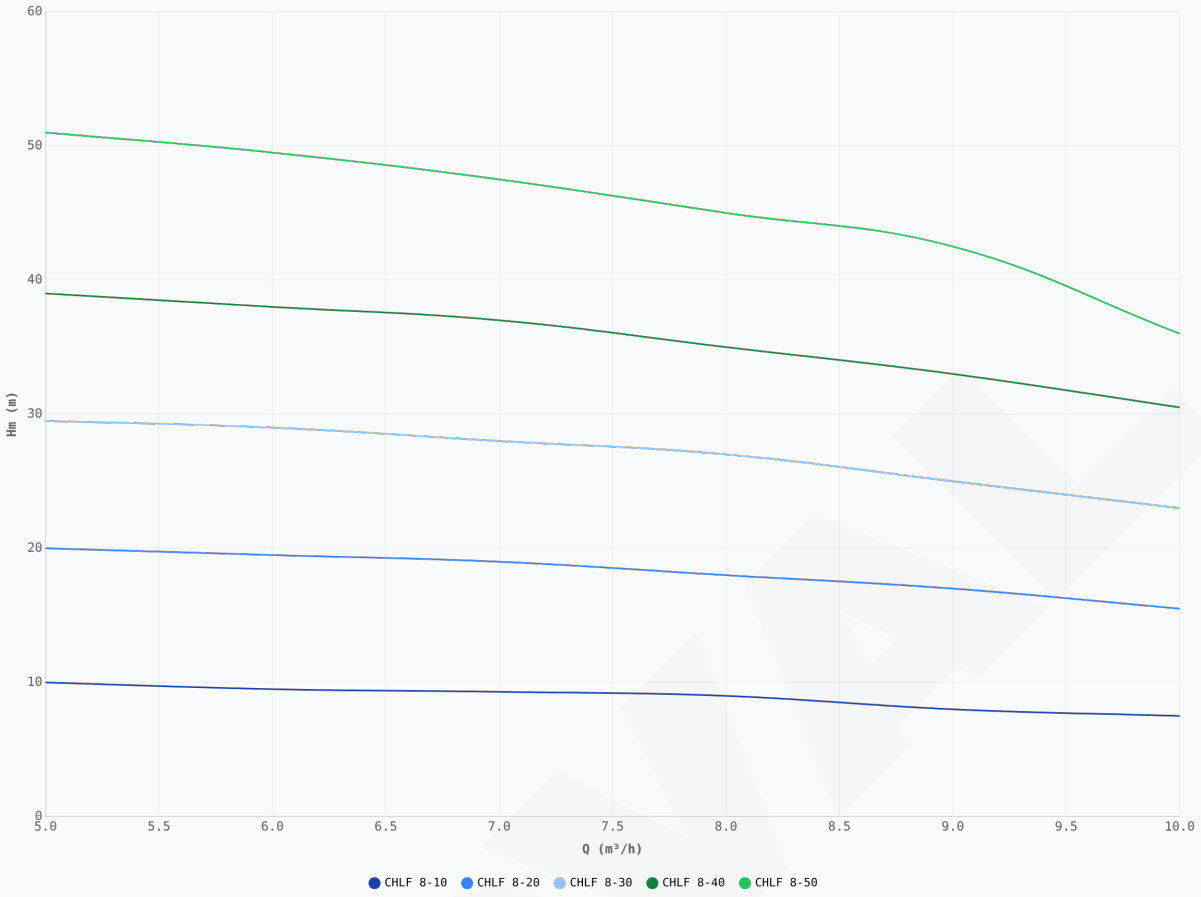

Curvas de caudal (Q) vs. altura manométrica (Hm)

Modelo	kW	HP	Amp (1~ / 3~)	m³/h	5	6	7	8	9	10
				Hm (m)						
CHLF 8-10	0,75	1,00	4.8 / 3.01-2.86		10,0	9,5	9,3	9,0	8,0	7,5
CHLF 8-20	0,75	1,00	4.8 / 3.01-2.86		20,0	19,5	19,0	18,0	17,0	15,5
CHLF 8-30	1,10	1,50	7.0 / 4.16-3.98		29,5	29,0	28,0	27,0	25,0	23,0
CHLF 8-40	1,50	2,00	9.1 / 5.96-5.37		39,0	38,0	37,0	35,0	33,0	30,5
CHLF 8-50	2,20	3,00	12.4 / 8.31-7.67		51,0	49,5	47,5	45,0	42,5	36,0

CURVA DE PERFORMANCE (Q - HM)

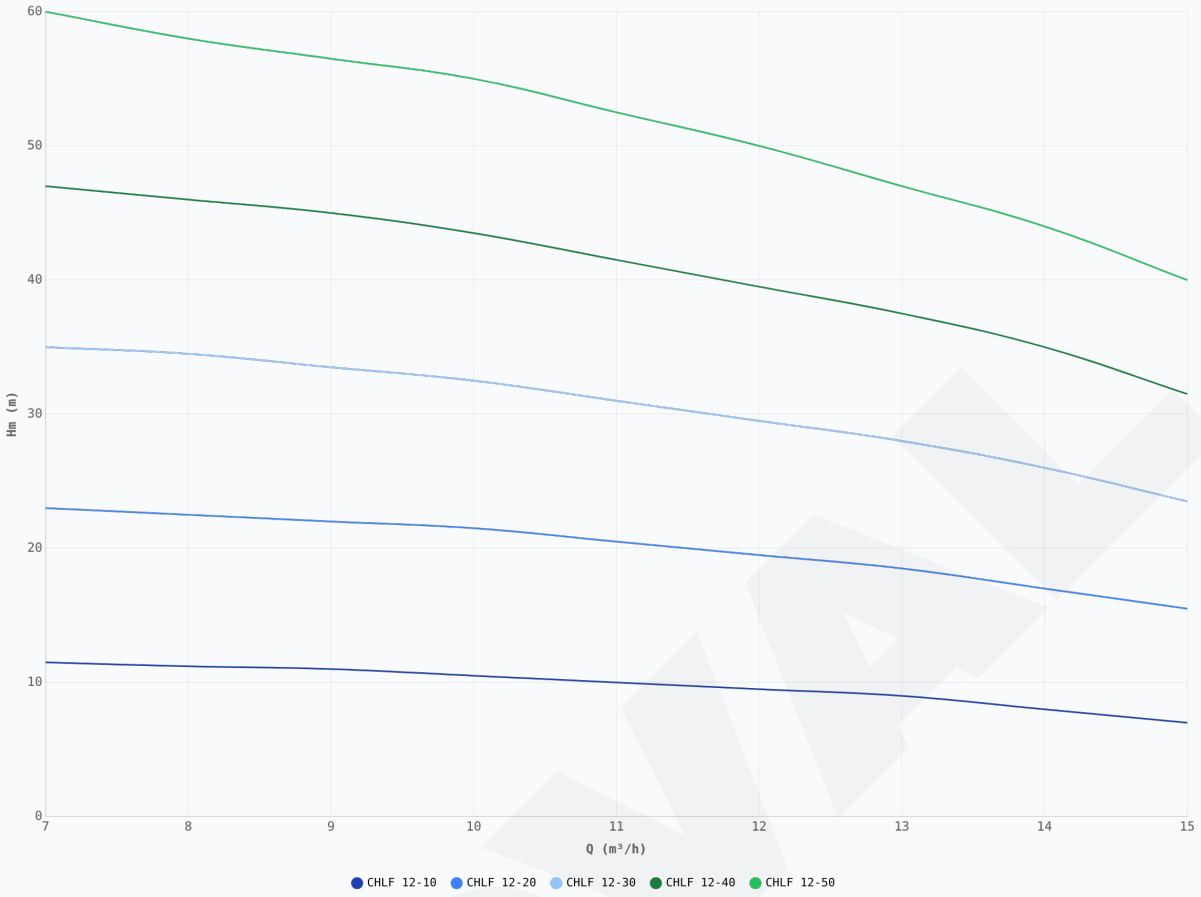

Curvas de caudal (Q) vs. altura manométrica (Hm)

Modelo	kW	HP	Amp (1~ / 3~)	m³/h	7	8	9	10	11	12	13	14	15
				Hm (m)									
CHLF 12-10	0,75	1,00	7-6.4 / 4.5-4.1		11,5	11,2	11,0	10,5	10,0	9,5	9,0	8,0	7,0
CHLF 12-20	1,20	1,60	7.6-7 / 4.9-4.5		23,0	22,5	22,0	21,5	20,5	19,5	18,5	17,0	15,5
CHLF 12-30	1,80	2,50	11-10.1 / 7.1-6.5		35,0	34,5	33,5	32,5	31,0	29,5	28,0	26,0	23,5
CHLF 12-40	2,40	3,50	14.6-13.4 / 9-8.3		47,0	46,0	45,0	43,5	41,5	39,5	37,5	35,0	31,5
CHLF 12-50	3,00	4,00	- / 11-10		60,0	58,0	56,5	55,0	52,5	50,0	47,0	44,0	40,0

LISTA DE MATERIAIS

Pos.	Descrição	Material	AISI / ASTM
1	Entrada	Aço inoxidável	AISI 304
2	Bujão	Aço inoxidável	AISI 304
3	Rolamento	Carboneto de Tungsténio	-
4	Impulsor	Aço inoxidável	AISI 304
5	Veio	Aço inoxidável	AISI 304
7	Saída	Aço inoxidável	AISI 304
8	Empanque mecânico	SiC / Grafite	-
9	Tampa do motor	Alumínio	-
10	Base de apoio	Aço	AISI 1015
11	Porca de aperto	Aço inoxidável	AISI 304
12	Difusor	Aço inoxidável	AISI 304
13	Suporte do difusor	Aço inoxidável	AISI 304
14	Camisa do impulsor	Aço inoxidável	AISI 304